MOT JACKING BEAMS

Top Beam

As standard our 2 and 2.8 tonne models come with an extra-wide extending top beam - 1700mm

Raiser Blocks

Supplied as standard with each beam. Rubber topped screw pads 1543A and aluminium blocks 1526 that will fit anywhere over the length of the beam. Additional blocks can be supplied as optional extras

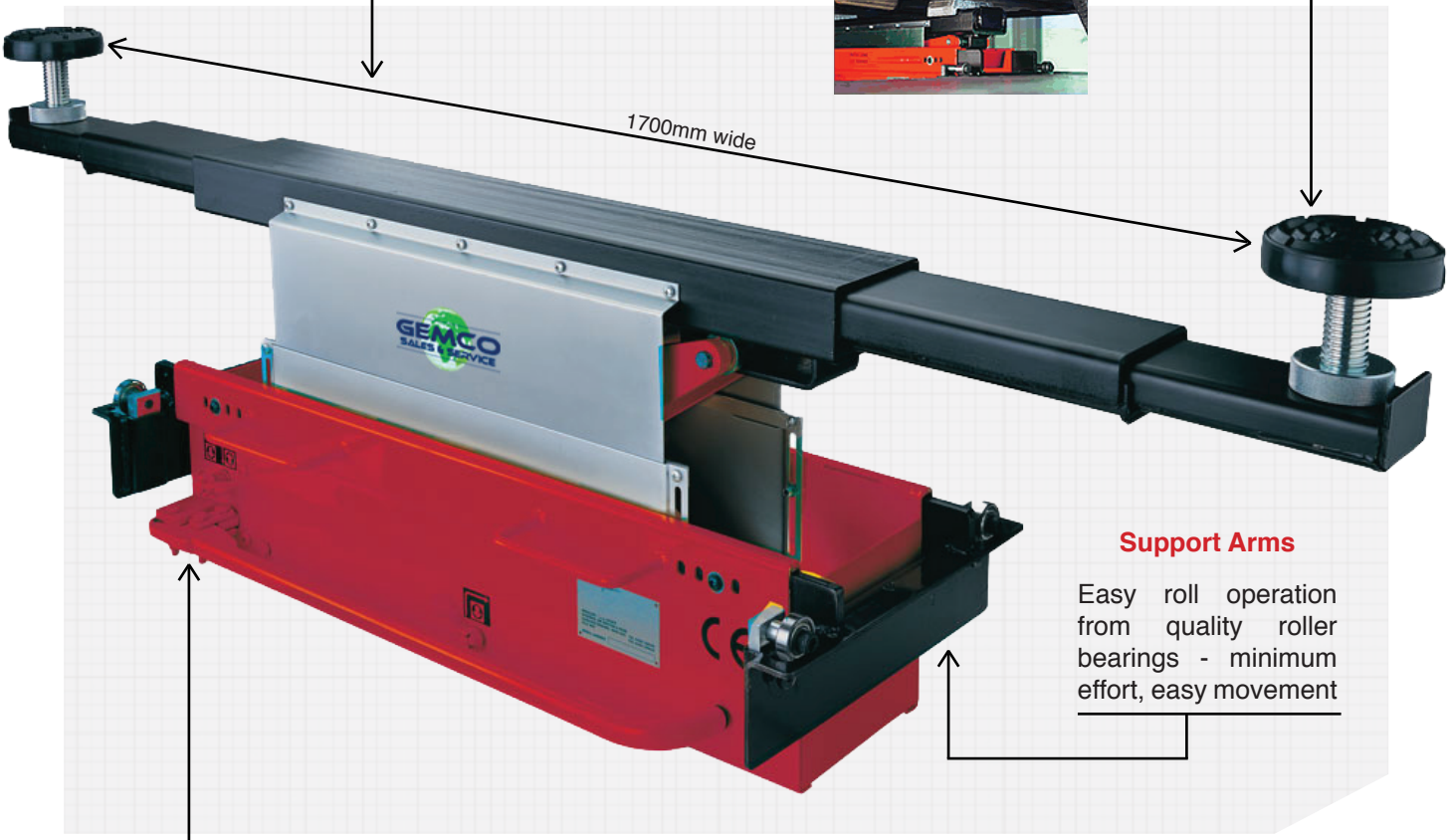

Support Arms

Easy roll operation from quality roller bearings - minimum effort, easy movement

NEW - Three-position Mechanical Lock

Engages automatically creating a safe working platform when carrying out extensive wheel overhauls

Ram and Scissors

A full 260mm lift with proven hydraulics, the heart of every GEMCO jacking beam: gutsy, robust and very reliable

Safety Features

- Hose burst valve prevents lowering of the beam
- Finger guard complies with European Machinery directive and CE marking
- Pressure release valve prevents overloading
- 3 stage safety lock

CE

Specifications/Images subject to change without prior notice. E&OE Images are for illustration purposes only. To validate warranty, proof of a valid maintenance contract will be required.

01604 828600 (t) | sales@gemco.co.uk (e) | www.gemco.co.uk (w)

GEMCO MOT JACKING BEAMS

Part No. Air/Hydraulic	GEMJB2	GEMJB2.8	GEMJB4	GEMJB6
A Width when extended	1700mm 67”	1700mm 67”	1605mm 63”	1300mm 51”
B Width when retracted	800m 31.5”	815mm 32”	864mm 34”	910mm 35.8mm
C Minimum width over support arms	775mm 30.5”	790mm 31’	830mm 32.5”	920mm 36.2”
D Maximum width over support arms	1125mm 44”	1130mm 44.5”	1300mm 51”	1290mm 50.7”
E Closed height	212mm 8.25”	242mm 9.5”	261mm 10.25	320mm 12.6”
F Total lift	260mm 10.28”	260mm 10.25”	205mm 8”	200mm 7.8”
*G Height above platform/floor	75mm 2.9”	92mm 3.6”	97mm 3.8”	101mm 3.9”
*can be set lower with special arms if required				
Weight - with top beam	87kgs 192lbs	113kgs 249lbs	155kgs 341lbs	224kgs 494lbs
OPTIONAL EXTRA WIDE TOP BEAM				
C Minimum width over support arms	680mm 26.75”	700mm 27.58”	N/A	N/A
D Maximum weight over support arms	1015mm 40”	1020mm 40.5”	N/A	N/A
Narrow Jacking Beams to fit narrow pits and lifts (pump mounted externally)				
A Width when extended	1850mm 73”	1850mm 73”	N/A	N/A
B Width when retracted	948mm 37”	963mm 38”	N/A	N/A

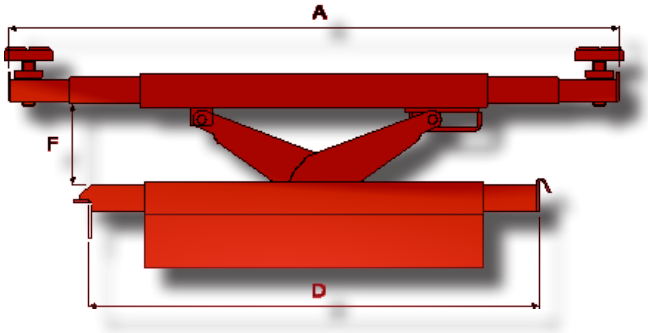

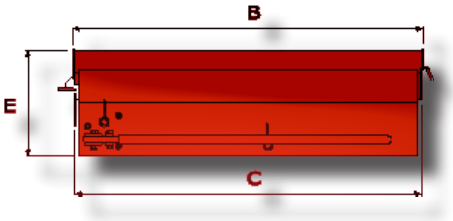

RAISER BLOCKS	RATED 2 TONNES	RATED 2.8 TONNES	RATED 4 TONNES	RATED 6 TONNES
Part no.				
1532A	Standard	Standard	Standard	Standard
1526	Standard	Standard	Standard	N/A
1835	N/A	N/A	N/A	Standard
1836	N/A	N/A	N/A	Standard
1527	Optional	Optional	Standard	N/A
1532C	Optional	Optional	Optional	Optional
1532V	Optional	Optional	Optional	Optional

Specifications/Images subject to change without prior notice. E&OE Images are for illustration purposes only. To validate warranty, proof of a valid maintenance contract will be required.