Date: 200112	Sign. SJO	Scale: 1:40	No.T11492

UPLIFTING COMPANY

AUTOP STENHOJ
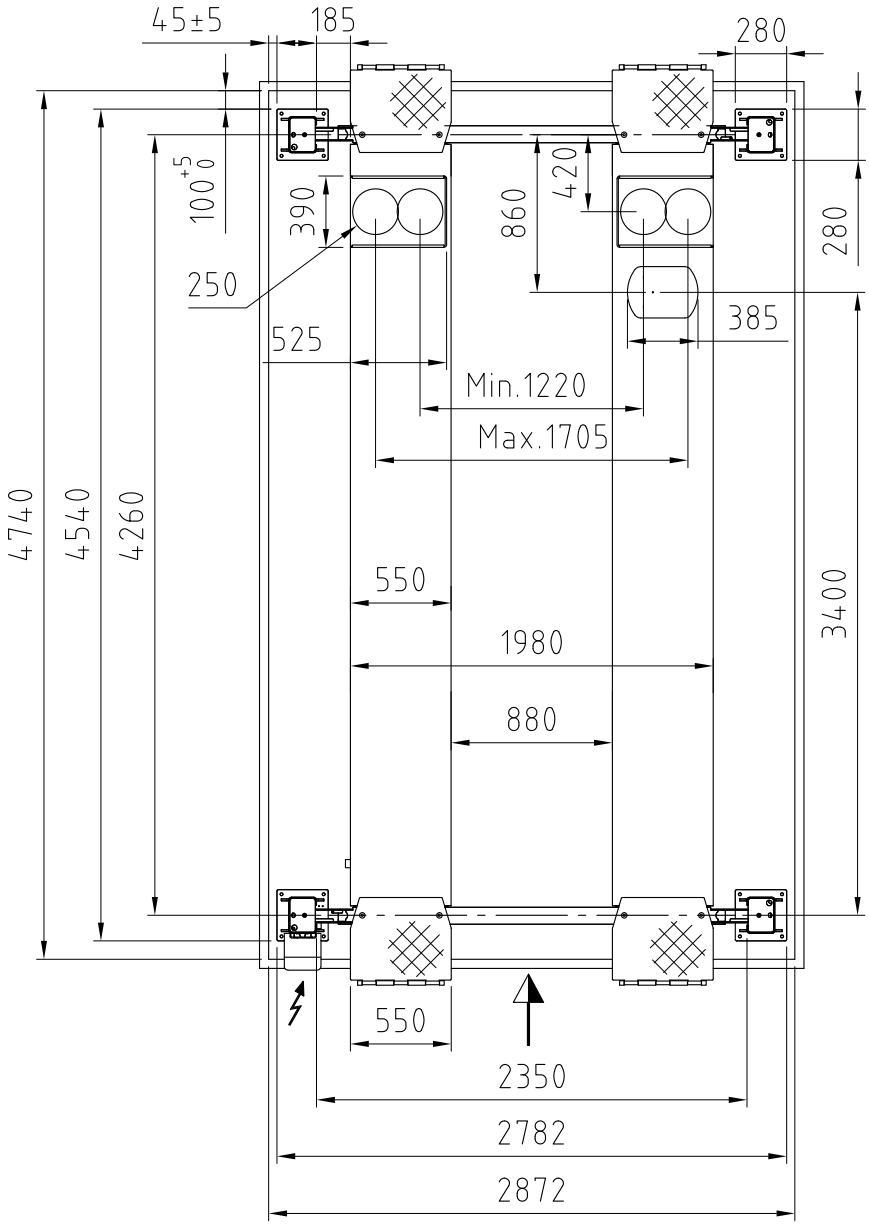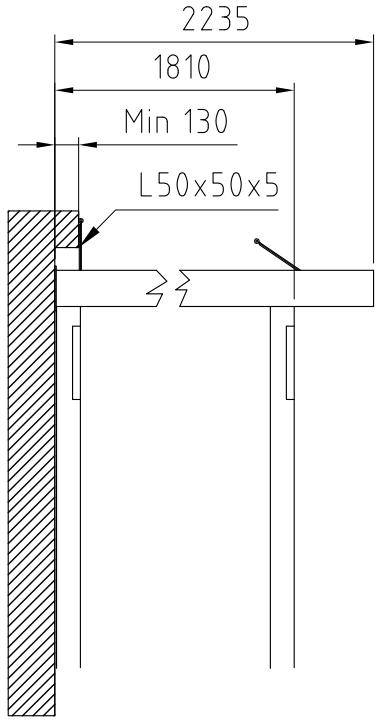
Major MOT 4024-43
ATL prepared
4000 kg (recessed)
Rev. date: 150514