Application

- Repair and maintenance
- Body work

Approvals

- Opel
- Volkswagen Group

Masterlift 2.30 Sav 230

Electro-hydraulic twin-ram lift, 3 t capacity, superstructure with adjustable arms

Description:

Steel cassette:
- Waterproof steel cassette

Hydraulic unit:
- Hard-chrome plated cylinder
- Flexible synchronization and safety system
- Corrosion-free guiding elements
- Pump unit with immersed motor
- Ecological hydraulic fluid
- Pneumatic emergency lowering
- Programmable pushbutton control unit

Superstructure:
- Single telescopic arms
- Simple arm locking system
- Low minimum height

Standard colours
- Base plate: Grey RAL 7016
- Arms: Red RAL 3020

Illustrations are not binding and optional. Under reserve of dimensional, constructional and technical modifications! Validity 07/2016

Technical data	
Lifting capacity	3,000 kg
Lifting height	1,950 mm
Working height	2,080 mm - 2.130 mm
Cylinder diameter	2 x 123 mm
Distance between cylinders	2,285 mm
Lifting / lowering time	app. 30 Sec.
Foundation depth	2,625 mm
Pump unit	3.0 kW
Ecological hydraulic fluid	10 l
Voltage	230/400 V - 50 Hz - 16 A

Arm superstructure	
Total width	2,620 mm
Lifting pad included in the delivery	11033 (125 - 175 mm)
Min. height	125 - 175 mm
Drive-through width	2,050 mm
Arm length, min. - max.	550 - 845 mm

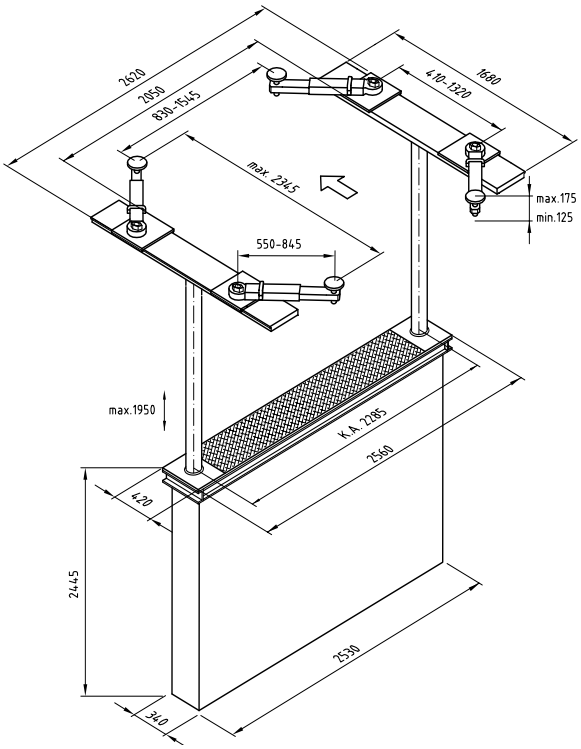

Scan the QR-Code for detailed product information.

Further Information on www.autopstenhoj.com

Versions:

Steel cassette:
- ☐ Zinc-coated
- ☐ Coated
- ☐ Self-carrying

Installation:
- ☐ Superstructure on floor
- ☐ Ceiling installation

Optional extras:

- ☐ Large program of extra pads

Special colours available on request!

GEMCO Equipment Ltd
153 - 165 Bridge Street, Northampton, NN1 1QG
(t) 01604 828 500 **(e)** sales@gemco.co.uk **(w)** www.gemco.co.uk