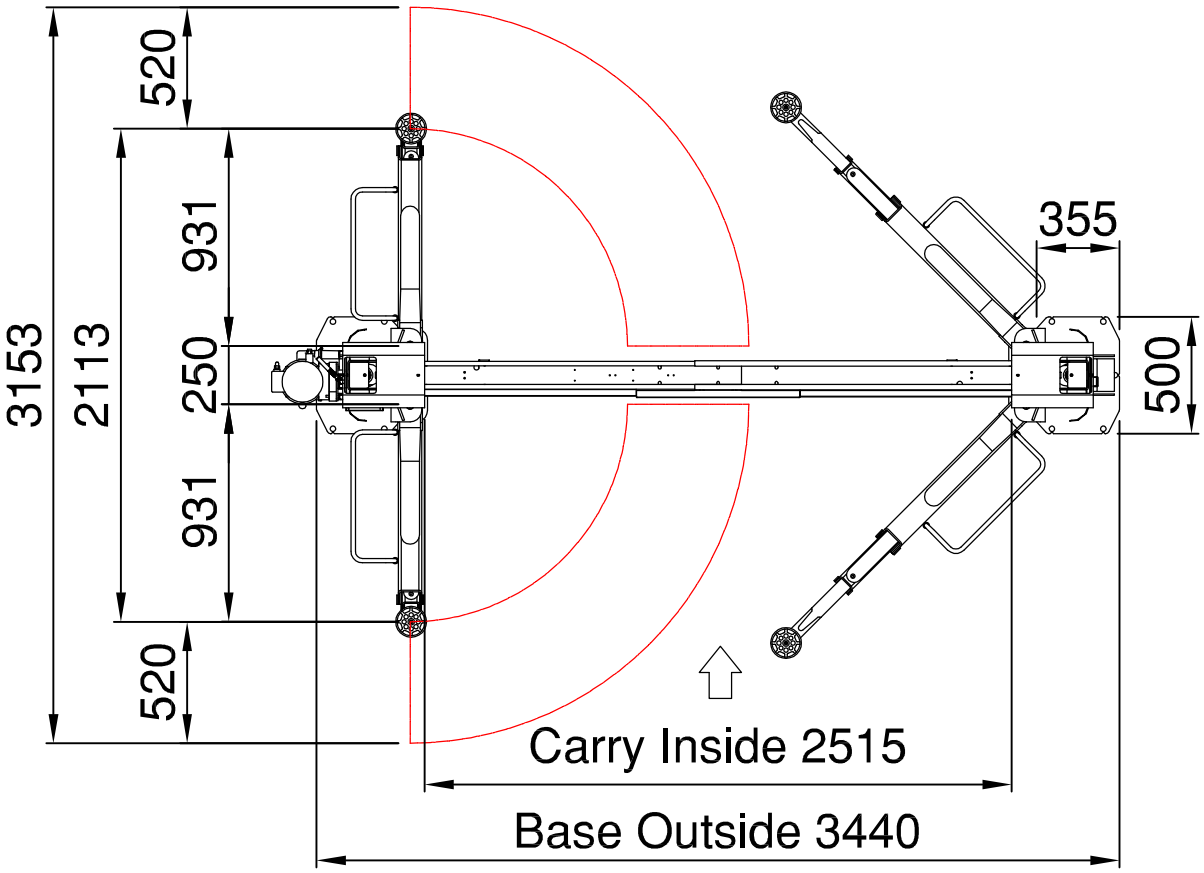
520
931
250
931
520
3153
2113
355
500
Carry Inside 2515
Base Outside 3440

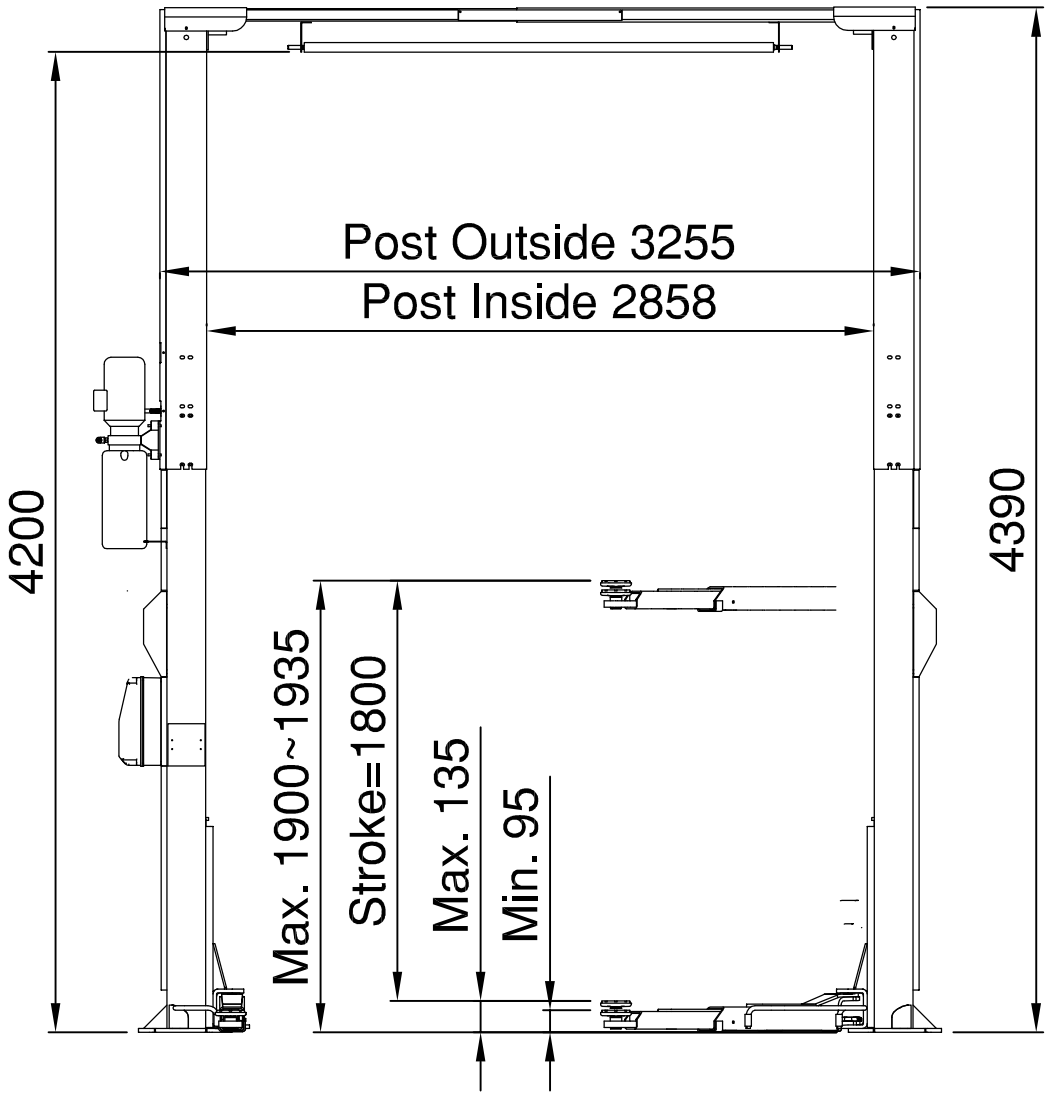
Post Outside 3255
Post Inside 2858
4200
4390
Max. 1900~1935
Stroke=1800
Max. 135
Min. 95