Date: 090410	Sign. KDA	Scale: 1:35	No.T11406

UPLIFTING COMPANY

AUTOP STENHOJ

Maestro 2.20
Green Care
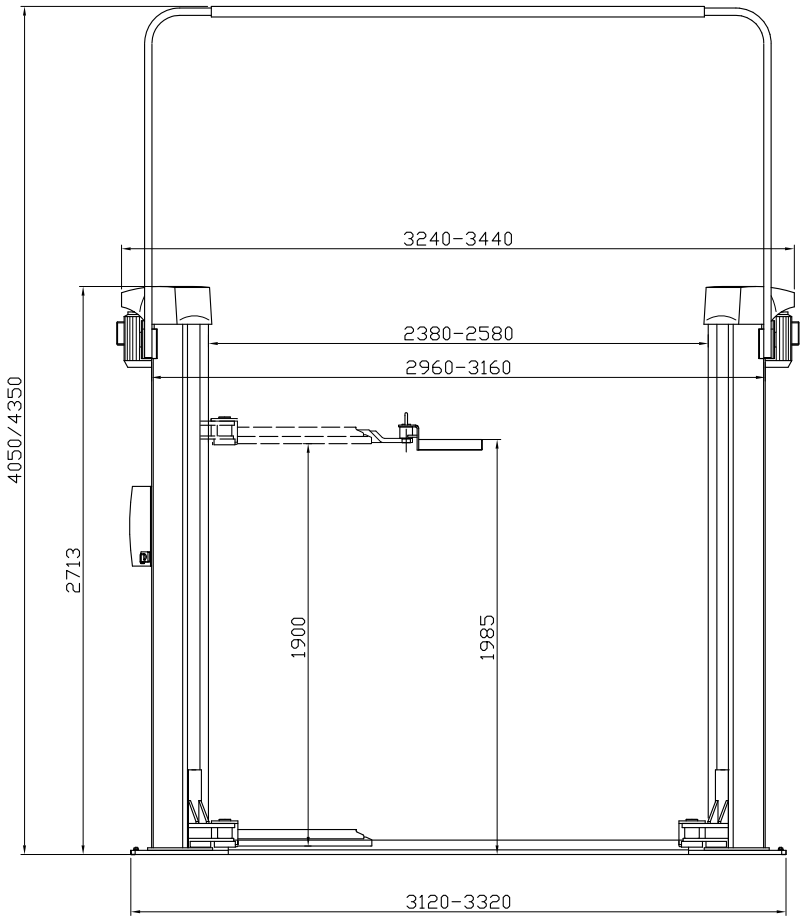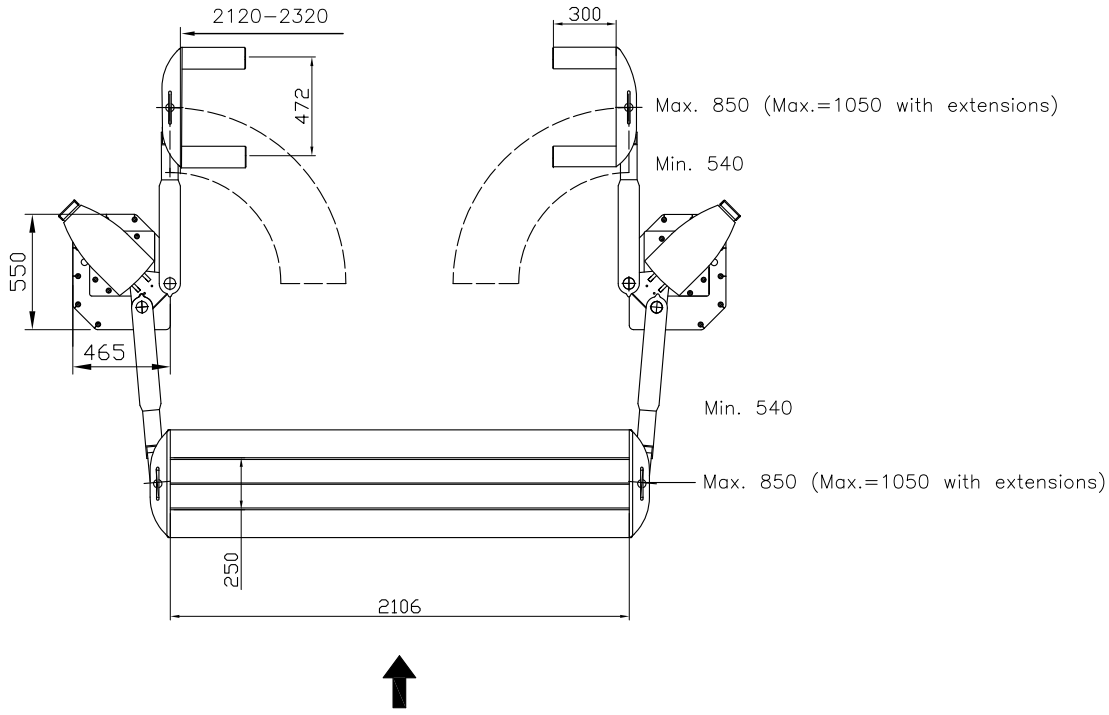
Rev. date: 140917